ENHANCING ALZHEIMER'S DISEASE DIAGNOSIS: A NOVEL LOW-HRNET APPROACH FOR IMPROVED CLASSIFICATION

Hongfeng Wu
School of Opto-Electronic and Communication Engineering
Xiamen University of Technology
Xiamen, Fujian, China
wuhongfeng@stu.xmut.edu.cn

Weiming Lin*
School of Opto-Electronic and Communication Engineering
Xiamen University of Technology
Xiamen, Fujian, China
linwm@xmut.edu.cn

Pan Liu
School of Opto-Electronic and Communication Engineering
Xiamen University of Technology
Xiamen, Fujian, China
2222031278@stu.xmut.edu.cn

Abstract

Alzheimer's disease is a progressive neurodegenerative disease, primarily characterized by the gradual loss of cognitive and memory functions, which places a significant burden on patients and their families. Therefore, early diagnosis and effective treatment are particularly important. The aim of this paper is to explore the improvement in classification accuracy for AD (Alzheimer's Disease) patients by enhancing the artificial neural network structure and introducing a new attention mechanism without increasing the depth of the CNN network. A novel network structure called Low-HRNet (high-resolution network) is proposed, which combines a HRNet with an inception module for more efficient information extraction. By cross-fertilizing feature information at different resolutions, the computational cost is reduced while preserving high-resolution features. Additionally, the introduction of the Dual Attention mechanism further enhances the feature extraction capability. The results of the experiments demonstrate that the enhanced Low-HRNet reached an accuracy of 94.53% in classifying Alzheimer's disease (AD) versus NC (normal control), representing a significant improvement compared to the 88.14% accuracy achieved by the conventional CNN network. The experimental results show that the accuracy of automatic classification of Alzheimer's disease can be effectively improved by optimising the network structure and introducing an advanced attention mechanism.

CCS Concepts

• **Computer systems organization** → Architectures; Other architectures; Neural networks.

Keywords

Alzheimer's disorder, binary diagnosis, feature fusion, hierarchical neural architecture

*Corresponding author

Permission to make digital or hard copies of all or part of this work for personal or classroom use is granted without fee provided that copies are not made or distributed for profit or commercial advantage and that copies bear this notice and the full citation on the first page. Copyrights for components of this work owned by others than the author(s) must be honored. Abstracting with credit is permitted. To copy otherwise, or republish, to post on servers or to redistribute to lists, requires prior specific permission and/or a fee. Request permissions from permissions@acm.org.
EITCE 2024, Haikou, China
© 2024 Copyright held by the owner/author(s). Publication rights licensed to ACM.
ACM ISBN 979-8-4007-1009-4/2024/10
https://doi.org/10.1145/3711129.3711390

ACM Reference Format:
Hongfeng Wu, Weiming Lin, and Pan Liu. 2024. ENHANCING ALZHEIMER'S DISEASE DIAGNOSIS: A NOVEL LOW-HRNET APPROACH FOR IMPROVED CLASSIFICATION. In *2024 8th International Conference on Electronic Information Technology and Computer Engineering (EITCE 2024), October 18–20, 2024, Haikou, China.* ACM, New York, NY, USA, 5 pages. https://doi.org/10.1145/3711129.3711390

1 INTRODUCTION

Alzheimer's disease is a common cause of cognitive decline in older adults. The annual conversion rate from mild cognitive impairment (MCI) to Alzheimer's disease (AD) ranges between 10 and 15 per cent[1]. Although healthy people with good lifestyles and of the same age typically experience about 1% to 2% of mental decline per year. However, there are specific measures that can be taken to slow the progression of the disease[2]. Timely and accurate medical diagnosis is critical to curbing the progression of the disease[3]. Thus, investigating automated diagnostic methods has become particularly important.

Neuroimaging technology is one of the effective ways to achieve auxiliary diagnosis of Alzheimer's disease (AD). structural magnetic resonance imaging (sMRI) provides clear three-dimensional anatomical images of the brain and is commonly used to study changes in brain tissue and structure, sMRI has the advantages of being non-invasive, having high spatial resolution, and providing high contrast, making it well-suited for recording disease data in AD patients. Deep learning can extract necessary information from both local and global aspects of an image in an interrelated manner, so it can used for AD diagnosis. Networks such as CNN, ResNet (Residual Network), and DenseNet (Dense Convolutional Network) have been frequently applied to the classification task of AD. However, traditional CNN networks often encounter low classification performance when the network depth is shallow. As the network depth increases, training time also rises, without a definite guarantee of improved classification results. As features extracted from the image become deeper, the model's robustness and generalizability may decrease, making it crucial to appropriately retain high-level information and select the optimal network level. Bin Wang et al[4] used an improved ResNet network with a residual module for channel separation, improving AD/NC classification accuracy. Yu et al[5] used software to align, classify tissues, and correct bias in sMRI images, then trained them using a 3D ResNet-101 network, achieving a higher classification accuracy for AD and NC. Zhen et al[6] used a VGG (Vision Geometrical Group) 16 network to extract detailed features from sMRI images, combining them with high-resolution features and using a sliding attention mechanism to fuse

features with different window sizes, achieving up to 77.2% classification accuracy for AD/MCI. Faizal et al[7] used an improved Siamese network based on the VGG16 network to fuse features from PET (Positron Emission Tomography), MRI (Magnetic resonance imaging), and fMRI (Functional magnetic resonance imaging) images, subsequently using three CNN networks and a triple loss function for training, achieving an accuracy of 91.83% for disease classification. Gowhar et al[8] used a transfer learning approach, achieving a high accuracy for multi-classification of aligned sMRI images after pre-training VGG16 and ResNet50 networks. T. Illakiya et al[9] used the DenseNet-169 network and introduced an adaptive hybrid attention network to enhance non-local attention and coordinate point-out attention features, achieving high-precision resolution for MCI/AD. Based on the traditional CNN network model, this essay optimizes the network model to generate a new HRNet network, aiming to achieve higher accuracy of Alzheimer's disease binary classification recognition results. The key points of this paper are outlined as detailed below:

1) HRNet adds a cross-fertilization module for low-resolution and high-resolution feature information to the traditional CNN, preserving high-resolution features while extracting low-resolution information.

2) The network structure is internally refined using the Inception-Res structure, and the dual attention mechanism from the Dual Attention Net is introduced into the network.

2 RELATED WORKS

Using artificial intelligence algorithms based on neuroimaging and clinical data, computer-aided diagnosis of Alzheimer's disease involves grouping individuals into categories. Classification approaches include of binary classification [10], multistage classification [11], [12], and AD onset prediction [13], [14].

Computer-aided diagnosis of Alzheimer's disease using artificial intelligence algorithms based on neuroimaging and clinical data involves classifying individuals. Commonly, there are binary classifications and multivariate classifications. Binary classification involves distinguishing between NC vs. AD, NC vs. MCI, and MCI vs. AD. Multistage classification, on the other hand, can categorize individuals as NC, MCI, or AD simultaneously, which is more suitable for clinical applications, and AD diagnostic methods are primarily related to machine learning and deep learning techniques.

2.1 Application of machine learning to AD classification

The process of machine learning in Alzheimer's disease (AD) classification includes procedures such as data preprocessing, feature extraction, model training, classification and prediction, interpretation, and optimization. Some machine learning algorithms have been applied to AD diagnostics with notable results. As an illustration, Martinez-Murcia et al[15] designed a CAE framework that analyses collected data related to Alzheimer's disease through the use of a deep convolutional autoencoder, which has the advantage of being able to extract effective features from MRI images, which in turn allows for a data-driven approach to the assessment of associated neurodegenerative processes and cognitive deficits. The model has the advantage of being able to extract effective features from MRI images and then use a data-driven approach to assess the associated neurodegenerative processes and cognitive impairment.

Translated with www.DeepL.com/Translator (free version) It achieves an accuracy of over 80% in predicting Alzheimer's diagnoses.

2.2 Deep Learning for AD Diagnosis

In recent years, with the continued increase in GPU processing power and the fact that deep learning techniques no longer rely on manual feature extraction, this field has grown rapidly and is now widely used in medical image-assisted diagnostic procedures. As an example, Antony first proposed[16] two novel models, one named VGG16 and the other modelled as VGG19, aimed at diagnosing Alzheimer's disease.

2.3 Dual Attention

In recent years, some authors have proposed a new dual attention mechanism in scene segmentation tasks. The attention mechanisms used in DANet utilizes two attention mechanisms: the positional attention mechanism and the channel attention mechanism. The positional attention module is designed to detect spatial dependencies between any two points in the feature map[17]. For a feature at a particular location, it combines features from all locations through a weighted sum, where the weights are determined by the similarity of the relevant features. In contrast, the channel attention module focuses on relationships among different channels, updating each channel mapping by applying a weighted sum of all channel mappings.

3 METHODS

To address the problem of information loss and computational efficiency in feature extraction, the inception structure is used to optimize for information loss. This classical network structure in deep learning was first proposed by Szegedy[18]. The inception structure captures features at different scales through multiple convolutional and pooling layers in parallel, as shown in Figure 1.

It introduces convolution kernels of different sizes at each stage, including 1×1, 3×3, and 5×5 convolution operations, as well as a 1×1 pooling operation. This technique effectively gathers features at multiple levels and scales while decreasing the parameter count and computational load. By using the dimensionality reduction operation, the number of channels of the target feature map can be reduced, and this operation can improve the computational efficiency of the model. By stacking multiple inception structures, a deep convolutional neural network can be constructed to enhance the model's expressive ability and classification performance.

The CNN network used as an initial in this paper is shown in Figure 2, the network contains 4 downsampling operations, in order for the network to extract enough feature information, where each downsampling operation contains 2 convolution operations.

To enhance the accuracy of binary classification outcomes for Alzheimer's disease diagnosis, the CNN model was optimized and improved by using dual attention modules and cross-fusion of feature maps with different resolutions. The optimized network model is shown in Figure 3.

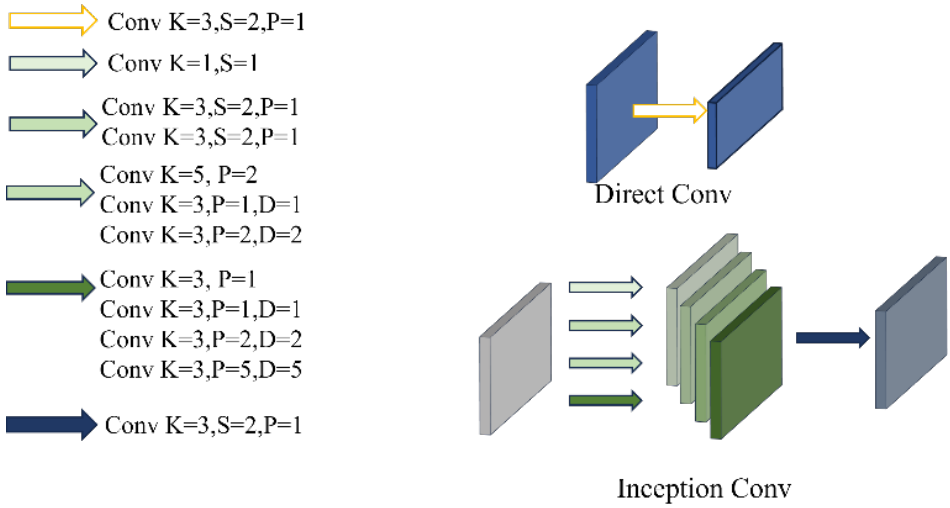

Figure 1: Inception structure.

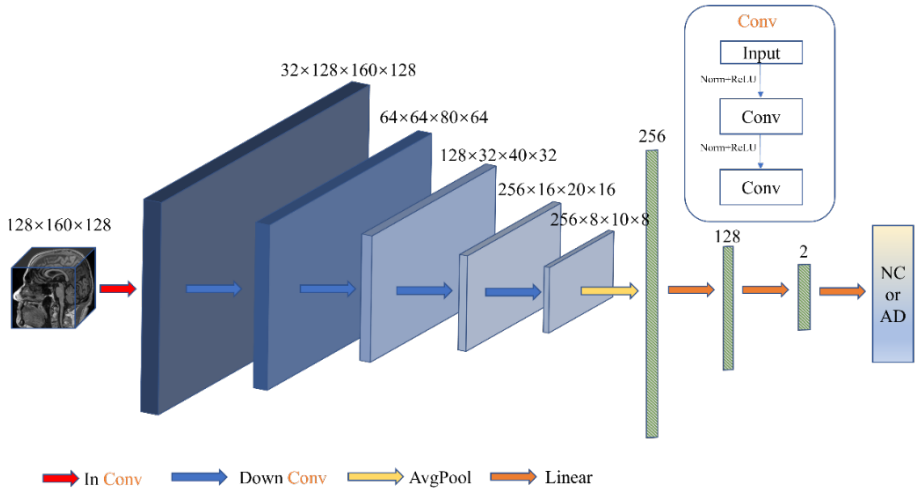

Figure 2: Traditional CNN network model.

Unlike the original HRNet, the network used in this paper employs cross-fusion resolution for 1/2-size images after downsampling the initial image once to reduce computational cost. It retains the feature maps with the smallest resolution in the output stage of the network and downsamples the larger feature maps in other channels, splicing them with the smallest feature maps. The specific workflow of the network (hereafter referred to as Low-HRNet) is as follows.

The complete sMRI image enters the first layer of the network after one downsampling in the residual module. The Inception Res Structure is used to expand the number of channels. In the second stage of the network, the 1/2-size image is downsampled again after channel expansion, and feature fusion is performed on the two resolutions in a crosswise manner. This process is repeated in the third stage, where the 1/4-size image is downsampled, and the smallest feature map is spliced with another. Downsampling is then performed on the 1/4-size image to obtain a 1/8-size image. After cross-fusion of feature maps of different resolutions, downsampling is performed on the 1/2 and 1/4-size images. Three 1/8-size images are spliced, and a convolutional neural network with a step size of 2 is used for feature extraction. The final image, reduced to 1/16 of its original size, is produced through the dual attention module for feature enhancement, followed by adaptive global average pooling and classification via a fully connected layer.

4 EXPERIMENTS AND RESULTS

The experimental platform used an NVIDIA GeForce RTX 3090 GPU, and the optimizer selected was the RAdam optimizer. The loss function was cross-entropy loss, with an initial learning rate of 0.0001 and a weight decay of 5e-4. The training mode maintained

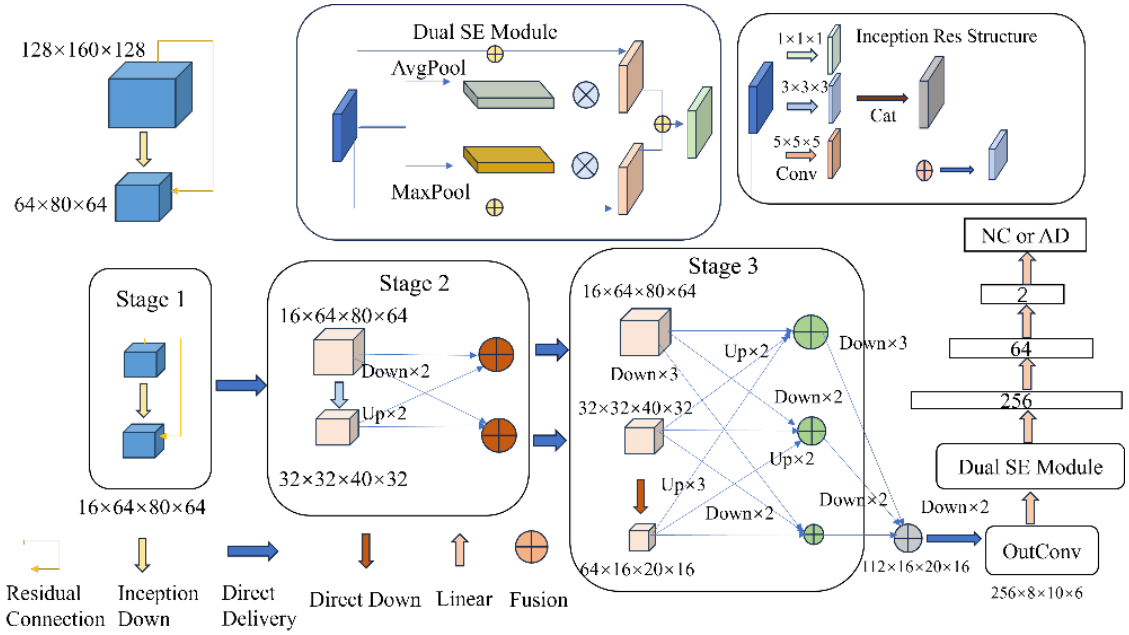

Figure 3: Low-HRNet network model.

Table 1: Dichotomization of AD diagnosis using different network models

Method	Accuracy	Precision	Recall	F1	AUC
CNN	88.14%	88.06%	87.98%	0.8802	0.8797
CNN+Attention	90.83%	90.77%	91.08%	0.9081	0.9108
CNN+Inception	91.84%	91.65%	91.84%	0.9173	0.9184
CNN+Attention+Inception	92.33%	92.21%	91.99%	0.9210	0.9199
Low-HR	89.58%	90.28%	88.34%	0.8903	0.8834
Low-HR+DualAttention	92.55%	92.64%	92.42%	0.9251	0.9242
Low-HR+Inception	92.39%	92.48%	92.43%	0.9239	0.9243
Low-HR+DualAttention+Inception	**94.53%**	**94.67%**	**94.35%**	**0.9448**	**0.9435**

model results based on the lowest validation set loss within 60 epochs, and the experimental test set was used to evaluate accuracy and F1-score. The F1-Score is a statistical metric utilized to assess the performance of binary (or multi-class) models. It incorporates both precision and recall from the classification model. Essentially, the F1-Score serves as a weighted average of these two metrics, ranging from 0 to 1, where higher values indicate superior model performance.

$$\text{F1} - \text{score} = 2 \times \frac{\text{Precision} \times \text{Recall}}{\text{Precision} \times \text{Recall}} \tag{1}$$

The experimental results are shown in Table 1.

From the table, it can be seen that the initial CNN network has a classification accuracy of 88.14% due to its shallow network hierarchy. The classification accuracy improves by 2.96% with the addition of the dual-attention mechanism, by 3.7% when using inception instead of a fixed kernel convolution in the CNN, and by 4.19% when both methods are added to the CNN. The accuracy of the Low-HR network with both methods reaches 94.53%, which is 2.2% higher than the CNN with both methods. Meanwhile, the basic Low-HRNet with different resolution cross-phase fusion improves classification accuracy by 1.44% compared to the original CNN network. Ablation experiments show that the dual attention module and the inception structure improve Low-HR accuracy by 2.97% and 2.81%, respectively.

5 DISCUSSION

The advantage of this paper in its application to dichotomous discrimination of Alzheimer's disease is that it does not require cranial stripping, alignment, and other operations, thus reducing operational complexity. Meanwhile, the improvement of classification accuracy for AD patients is realized by adopting a shallower network, fewer number of channels, and occupying less computing space.

However, there are some shortcomings in this paper. The model structure optimization reduces computational costs, but still relies

on high-performance computing resources, which may limit its application in resource-limited environments.

In this paper, only sMRI images are used as the basis for training and testing. Nowadays, there are more types of diagnostic images for Alzheimer's disease, such as DTI (Diffusion Tensor Imaging), fMRI, and PET, among others. Additionally, other multimodal images are used in the clinical diagnosis of AD. Therefore, we can consider using the same network to extract information from different types of data and modalities, allowing this information to interact within the network to develop a model that can recognize Alzheimer's disease earlier in a multiclassification task. This model can help patients detect the disease sooner and formulate appropriate treatment plans.

6 CONCLUSION

This paper presents an enhancement of a shallow convolutional neural network inspired by HRNet, which maintains high-resolution features while also capturing low-resolution information. Additionally, the concept of inception is incorporated to optimize the internal architecture of the network, allowing for an increase in its width without adding depth, thereby improving the network's information extraction capabilities. Furthermore, this study employs a dual attention mechanism that demonstrates superior performance compared to two separate single-attention mechanisms. When NC/AD classification is performed using cranial sMRI images that have been simply preprocessed, the classification accuracy reaches 94.53%, which is a significant improvement over the original CNN network.

Acknowledgments

This work was supported by Fujian Provincial Natural Science Foundation of China [grant number 2022J011271, 2023I0044].

References

[1] Alzheimer's Disease Facts and Figures. Alzheimer's & Dementia; Alzheimer's Association's Publication & Wiley: Chicago, IL, USA, 2023.

[2] Rajput, A. Does essential tremor increase the risk of dementia? No. Int. Rev. Neurobiol. 2022, 163, 233–253.

[3] Rasmussen, J.; Langerman, H. Alzheimer's Disease-Why We Need Early Diagnosis. Degener. Neurol. Neuromuscul. Dis. 2019, 9, 123–130.

[4] Wang. B., Wu. H., R. Koo, Rui, E. Jingbo, and He, S. H.. (2023). Alzheimer's disease classification network based on improved resnet. Intelligent Computers and Applications, 13(3), 69-76.

[5] Yusong, and Wenhao Liao. "Research on Alzheimer's disease classification algorithm based on 3D-ResNet." Computer Engineering and Science 42.6(2020):8.

[6] Zhentao Hu, Zheng Wang, Yong Jin, Wei Hou,VGG-TSwinformer: Transformer-based deep learning model for early Alzheimer's disease prediction,Computer Methods and Programs in Biomedicine,Volume 229,2023,107291,ISSN 0169-2607.

[7] Hajamohideen, F., Shaffi, N., Mahmud, M. *et al.* Four-way classification of Alzheimer's disease using deep Siamese convolutional neural network with triplet-loss function. Brain Inf. 10, 5 (2023). https://doi.org/10.1186/s40708-023-00184-w

[8] Mohi ud din dar, G.; Bhagat, A.; Ansarullah, S.I.; Othman, M.T.B.; Hamid, Y.; Alkahtani, H.K.; Ullah, I.; Hamam, H. A Novel Framework for Classification of Different Alzheimer's Disease Stages Using CNN Model Electronics 2023,12,469. https://doi.org/10.3390/electronics12020469

[9] Illakiya, T.; Ramamurthy, K.; Siddharth, M.V.; Mishra, R.; Udainiya, A. AHANet: Adaptive Hybrid Attention Network for Alzheimer's Disease Classification Using Brain Magnetic Resonance Imaging. Bioengineering 2023, 10, 714. https://doi.org/10.3390/bioengineering10060714

[10] Meng, X., Liu, J., Fan, X., Bian, C., Wei, Q., Wang, Z., Liu, W., & Jiao, Z. (2022). Multi-modal neuroimaging neural network-based feature detection for diagnosis of Alzheimer's disease. Frontiers in Aging Neuroscience, 14, 911220.

[11] Zhang, J., He, X., Liu, Y., Cai, Q., Chen, H., & Qing, L. (2023). Multi-modal cross-attention network for Alzheimer's disease diagnosis with multi data.

[12] Xu, Z., Deng, H., Liu, J., & Yang, Y. (2021). Diagnosis of Alzheimer's disease based on the modified Tresnet. Electronics, 10(16), 1908.

[13] Park, S., Hong, C. H., Lee, D., Park, K., & Shin, H. (2023). Prospective classification of Alzheimer's disease conversion from mild cognitive impairment. Neural Networks, 164, 335–344.

[14] Liu, Z., Maiti, T., & Bender, A. R. (2021). A role for prior knowledge in statistical classification of the transition from mild cognitive impairment to Alzheimer's disease. Journal of Alzheimer's Disease, 83(4), 1859–1875.

[15] F.J. Martinez-Murcia, A. Ortiz, J.M. Gorriz, J. Ramirez, D. Castillo-Barnes, Studying the manifold structure of Alzheimer's disease: a deep learning approach using convolutional autoencoders. IEEE J. Biomed. Health Inform. 24(1), 17–26 (2019)

[16] Antony F, Anita HB, George JA (2023) Classification on Alzheimer's Disease MRI Images with VGG-16 and VGG-19, vol. 312.

[17] Wang J, Sun K, Cheng T, *et al.* Deep high-resolution representation learning for visual recognition[J]. IEEE transactions on pattern analysis and machine intelligence, 2020, 43(10): 3349-3364.

[18] Szegedy C, Liu W, Jia Y, *et al.* Going deeper with convolutions[C]//Proceedings of the IEEE conference on computer vision and pattern recognition. 2015: 1-9.